HUBBELL
a **nudyne** company

Shipboard Electric Water Heater

6–119 gallon capacity, up to 12 kW, single phase

HydraStone® cement lining provides longer tank life

American Bureau of Shipping (ABS) Type Approval is available as an option.

Heavy-duty legs secure the tank to deck

Removable side-sway bulkhead attachment points provide added mounting integrity

Integrally welded mounting system for maximum stability and safety

- Copper-silicon tappings cannot rust or corrode
- High impact composite jacket cannot rust or corrode
- Polyurethane foam insulation reduces heat loss
- Built-in heat trap lowers operating costs
- Full five (5) year Non Pro-rated tank warranty is standard
- Optional full ten (10) year Non Pro-rated tank warranty for extended protection



SEAFARE SERIES

ME

A long lasting, trouble-free water heater
The Hubbell Seafare ME water heater is specifically designed for marine use. The entire water heater is securely fastened to the ship structure by utilizing deck and removable bulkhead mounting supports. To ensure tank longevity the ME is constructed of steel and internally lined with HydraStone cement, with solid copper-silicon threaded tank openings and a built in heat trap device.

Over 100 years of water heating expertise
Hubbell water heaters are the right choice for your commercial and industrial applications. We have water heating solutions for most energy sources with storage capacities from 1–10,000 gallons — all designed, engineered, and manufactured for reliability and longevity coupled with unparalleled support and service.

NOTE: Manufactured in an ISO 9001:2015 facility. ASME option available upon request. ABS option available upon request. BABA & BAA compliance is available upon request.

hubbellheaters.com **sales@hubbellheaters.com** **203.378.2650**

The Difference: HydraStone® Cement Lining

Cement lined tanks offer significant longevity, trouble-free operation and a lower lifetime cost.

The type of protective lining is the single most important feature when determining the quality of any water heater. The ability of a lining to protect the steel tank is primarily based on its thickness and complete coverage of all steel surfaces.

A glass lined tank uses only 5/1000 inches of glass (the thickness of a sheet of paper) which does not cover all internal surfaces. To compensate, all glass lined tanks require a sacrificial anode rod which must be periodically inspected and replaced.

Our tanks are lined with a minimum of ½ inches of high density HydraStone® cement — 100 times thicker than glass lining. Full coverage is achieved by injecting the precise amount of HydraStone cement into each tank and then centrifugally spinning it at 250 RPM to ensure complete and uniform coverage. This process provides maximum protection from the corrosive effects of hot water. Additionally, cement lined tanks do not require a sacrificial anode, eliminating periodic inspections and replacement costs associated with glass lined tanks.

Our water heater tanks are constructed with solid non-ferrous copper-silicon tank tappings which are impervious to the corrosive effects of hot water. Glass-lined tanks have steel tappings which are vulnerable to corrosion.

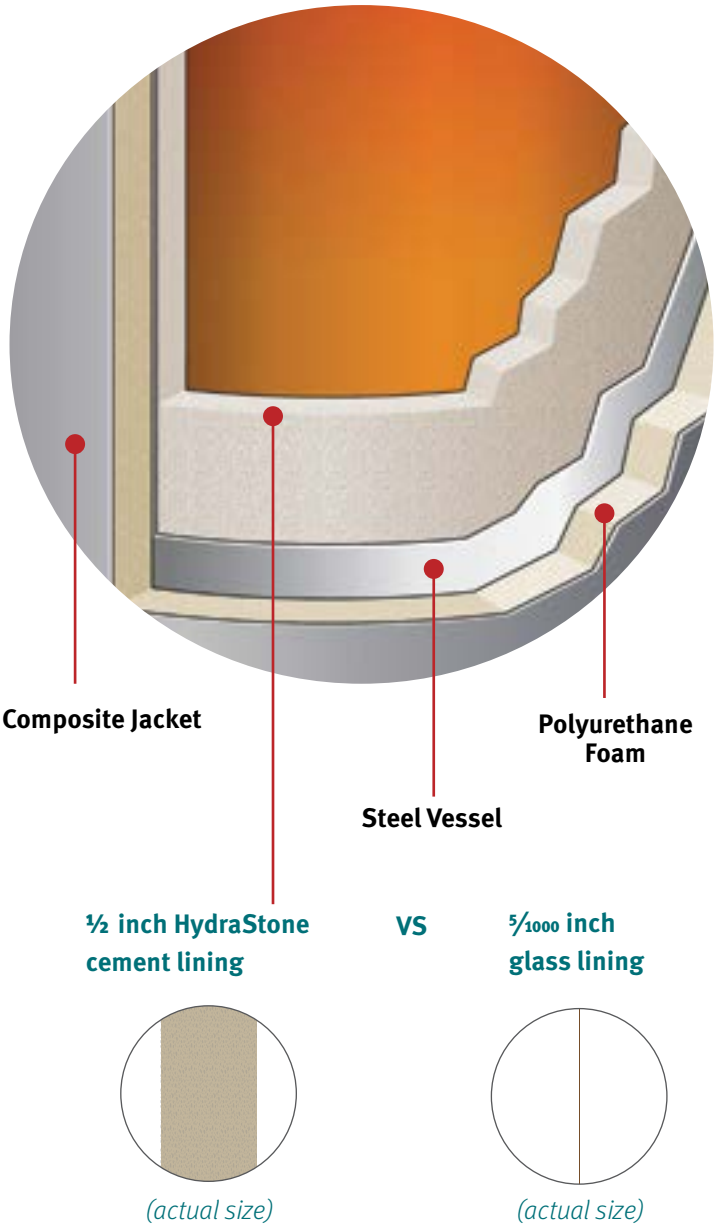

Heater Specifications

Tank	HydraStone® Cement Lined Steel
Volumes	6 – 119 gallons
Orientation	Vertical, horizontal option available
Voltages	120 – 480 Volt
Phases	1Φ
Inlet Size	3/4" Female NPT
Outlet Size	3/4" Male NPT
Drain Size	3/4" GHT
Relief Valve Size	3/4" Female NPT
Relief Valve Type	T&P, 210°F, 150 psi
Thermostat Range	110–170°F (surface)
Hi-Limit	190°F Manual Reset
Design WP	100 psi
Design TP	300 psi
Elements	Copper sheathed
Insulation	2" Polyurethane Foam on 6, 10 and 20 gallon 3" Polyurethane Foam on 30 gallons and above
Tank Warranty	
Standard	5 year Non Pro-Rated
Optional	10 year Non Pro-Rated
Electrical Warranty	1 Year
Jacket	High Impact Colorized Composite
Finish	White with Black Trim
Marine Classification	ABS Tier 5 certification optional



General Specifications

Tank

The Hubbell tank is all welded heavy steel construction designed for 100 psi working pressure and tested to 300 psi. Each tank is centrifugally lined with ½" thick seamless high density HydraStone® cement with guaranteed 100% coverage of all steel surfaces. All tank openings are non-ferrous solid copper-silicon and are resistant to the corrosive effects of hot water.

Mounting System*

Factory constructed heavy-duty leg supports are integrally welded to the tank for secure deck mounting. Removable side-sway bulkhead attachment points are provided for added mounting integrity. This mounting support system provides a stable water heater installation with improved safety compared to a typical water heater secured with a belly-band.

**6 gallon NA, 10-20 gallon: legs only, 30 gallon and up: legs and ears*

Plumbing

¾" combination cold water inlet and drain, with noncorrosive strata flow diffuser which prevents incoming cold water from mixing too rapidly with the hot water in the tank and assures delivery of more hot water — not lukewarm water. A ¾" hot water outlet with a uniquely designed built-in heat trap prevents heated water from radiating through the piping during standby periods.

Electrical

Copper sheathed immersion heating elements with low watt density for prolonged life — up to 12 kW in 120, 208, 240, 277, or 480 volt single phase (See chart for details). An adjustable surface thermostat operates in 110–170°F range. Integral hi-limit with manual reset button for over temperature protection is factory set at 190°F. Upper and lower element configurations are factory wired for non-simultaneous operation.

Insulation

Highly efficient polyurethane foam insulation exceeds the latest ASHRAE standards for energy efficiency and heat loss.

Jacket

The exterior protective jacket is constructed from high impact composite material which cannot rust or corrode and does not require painting.

Dimensions See additional dimensions on next page. Sample drawing is an ME50-4.5-4.5SLS

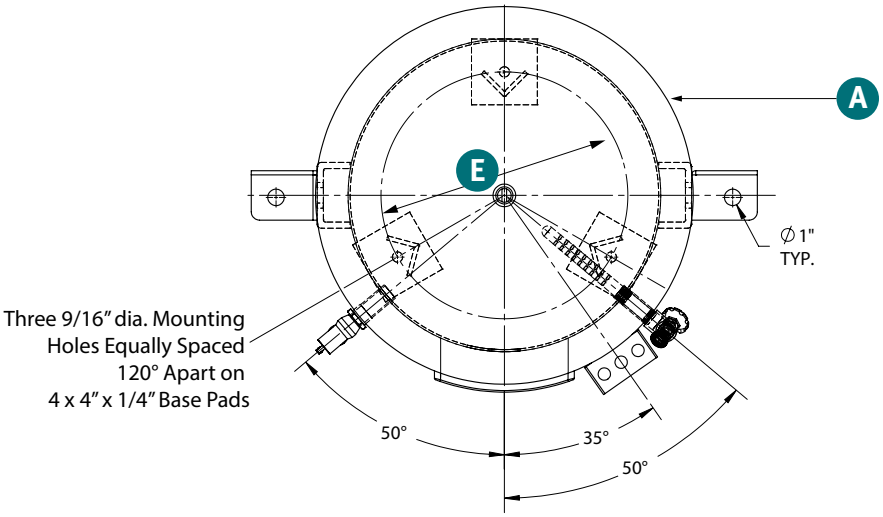

TOP VIEW

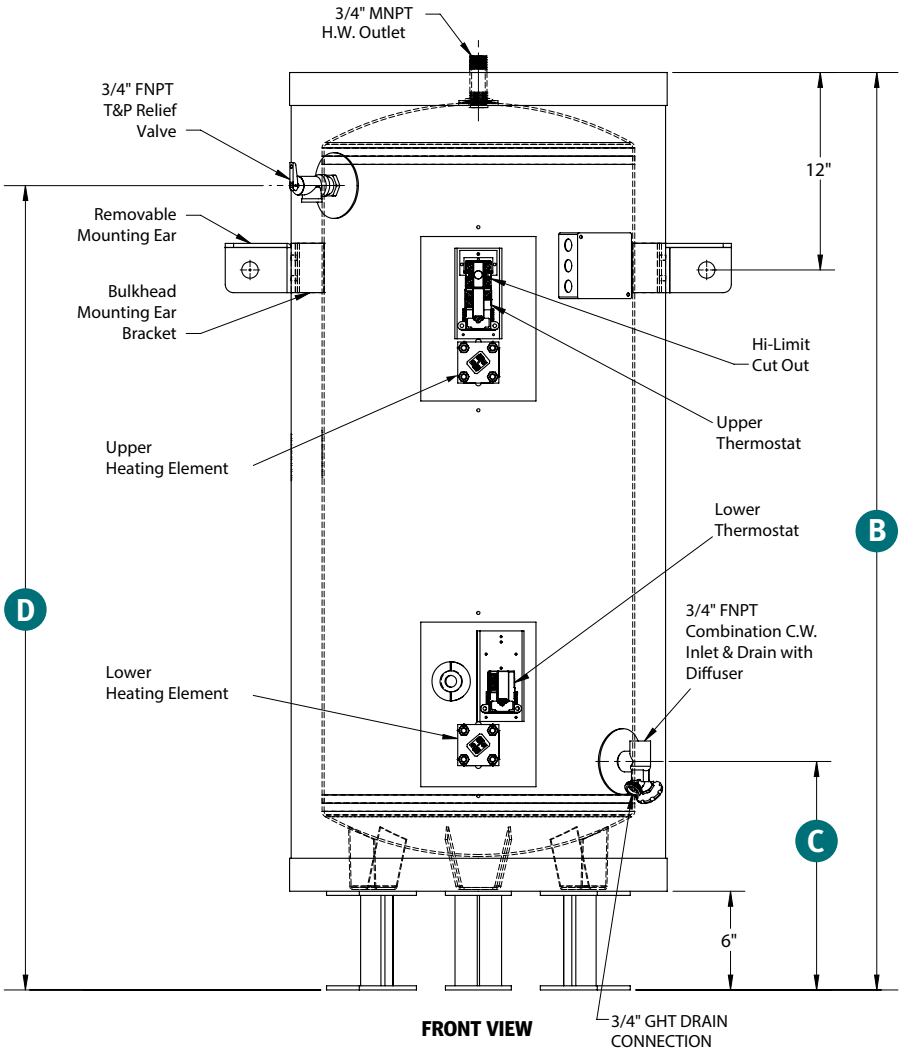

FRONT VIEW

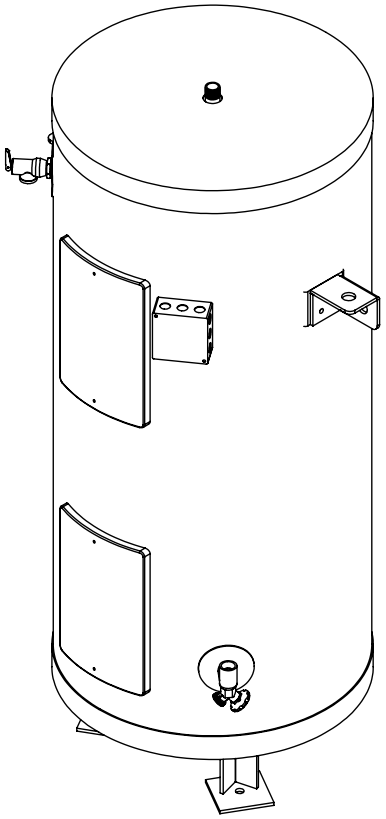

Three 2" x 2" x 1/4" Angle Legs With 4 x 4" x 1/4" Base Pads and 5/8" Diameter Bolt Holes on 15" Diameter Bolt Circle for Deck Mounting

Dimensions

Base Model Number	Storage Capacity (Gallons)	Dimensions (inches)						Shipping Weight (lbs.)
		Overall Diameter A	Overall Height B	Deck to Inlet CW Inlet C	Deck to T&P D	Bolt Circle E	Bulkhead Mounting Dimension	
ME06	6	15	18	6.125	12	None	None	105
ME10	10	20	27.5	13.5	21	13	None	140
ME20	20	20	38.75	13.5	33	13	None	180
ME30	30	22.75	47.75	13.5	40	13	12	255
ME40	40	22.75	63.25	13.5	57	13	12	300
ME55	55	25	64.25	13.875	49	15	12	415
ME65	65	28	53.25	13.875	46	18	12	420
ME80	80	28	64.25	13.875	57	18	12	455
ME100	100	28	74.5	13.875	68	18	12	465
ME120	119	30	74.75	13.875	68	20	12	525
ME30U	30	25	40.25	13	30	14 .875	None	260
ME40U	40	26	39	13	30	18	None	305
ME50U	50	30	43.25	13	43	19 .375	12	420

= Under counter model

Notes:

1. 120 volt models are available in 1500, 2000 and 2500 Watts only.
2. The 6, 10 and 20 Gallon models are available lower element design only. All other sizes have both upper and lower element banks of identical wattage and are wired for non-simultaneous operation.
3. For three phase open delta (unbalanced) wiring please contact factory for wattage availability.
4. For single phase 120, 208, 240, 277 or 480 volts, consult factory.

Formulas to Solve For:

Recovery

GPH x _____°FΔT x 0.00244 = kW

kW x 410 ÷ GPH = _____°FΔT

kW x 410 ÷ _____°FΔT = GPH

Note: 1 kW will heat 4.1 GPH at a 100°FΔT

Electrical

$\frac{kW \times 1000}{Volts} = Amps\ 1\ \Phi$

Metric Conversions

Liters x 0.2641 = Gallons

Gallons x 3.79 = Liters

Gallons x 0.003785 = m^3

m^3 x 264.2 = Gallons

1°C ΔT = 1.8 °F ΔT

°F = (°C x 1.8) + 32

°C = (°F – 32) x 0.556

Watts/Sq.Cm. x 6.4 = Watts/Sq.In.

Watts/Sq.In. x 0.155 = Watts/Sq.Cm.

psi x 0.06896 = Bar

Bar x 14.5 = psi

psi x 6.86 = kPa

KPa x 0.1456 = psi

Kg/Cm^2 x 14.28 = psi

psi x 0.07 = Kg/Cm^2

Lbs x 0.4536 = Kg

Kg x 2.2 = Lbs

kW and Amperage Selection Charts

Note: 1 kW will heat 4.1 GPH at 100°F rise

6 Gallon kW and Amperage *(Amperage shown in chart below indicates available models)*

	kW	Recovery (GPH)	1 Phase Voltages				
			120	208	240	277	480
SINGLE ELEMENT	1	4		5		4	
	1.5	6	13		6		3
	2	8		10		7	4
	2.5	10	21	12	10		
	3	12		14	13		6
	3.5	14		17	15	13	
	4	16		19	17	14	
	4.5	18			19		
	5	21			21		10
	6	25					13

XX = Amperages shown in red use an Immersion Thermostat, all others use a Surface Thermostat



10 and 20 Gallon kW and Amperage Chart *(Amperage shown in chart below indicates available models)*

	kW	Recovery @100°dT	1 Phase Voltages				
			120	208	240	277	480
SINGLE ELEMENT	1	4		5	4	4	
	1.5	6	13	7	6	5	3
	2	8	17	10	8	7	4
	2.5	10	21	12	10	9	5
	3	12		14	13		6
	3.5	14		17	15	13	7
	4	16		19	17	14	8
	4.5	18		22	19	16	9
	5	21		24	21	18	10
	6	25		29	25	22	13
	8	33		38	33	29	17
	10	41			42	36	21

XX = Amperages shown in red use an Immersion Thermostat, all others use a Surface Thermostat

All information is subject to change without notice. Consult factory for submittal drawings.

30-120 Gallon kW and Amperage Chart *(Amperage shown in chart below indicates available models)*

kW	Recovery @100°dT	1 Phase Voltages				
		120	208	240	277	480
1	4		5	4	4	
1.5	6	13	7	6	5	3
2	8	17	10	8	7	4
2.5	10	21	12	10	9	5
3	12		14	13		6
3.5	14		17	15	13	7
4	16		19	17	14	8
4.5	18		22	19	16	9
5	21		24	21	18	10
6	25		29	25	22	13
8	33		38	33	29	
10	41			42	36	

XX = Amperages shown in red use an Immersion Thermostat, all others use a Surface Thermostat





All information is subject to change without notice. Consult factory for submittal drawings.

Seafare ME Model Number Designation

MODEL	STORAGE CAPACITY (GAL)	See charts on pages 6-9		TANK	VOLTAGE / PHASE		OPTIONAL EQUIPMENT
		UPPER kW	LOWER kW				
ME	6 10 20 30 40 55 65 80 100 119 30U 40U 50U	(Upper and lower kW must be the same) 0-6 KW	(Upper and lower kW must be the same) 1-10 KW	**SL** = HydraStone® cement lined **CN** = Solid 90/10 copper-nickel **SS** = Solid stainless steel 316L *CN and SS tanks come standard with galvanneal jacket and fiber-glass insulation.*	**A** = 120-1 **RS** = 208-1 **S** = 240-1 **W** = 277-1 **T5S** = 440-1 **T4S** = 480-1	**Option E5 Three Phase Open Delta** **R** = 208-3 **T** = 240-3 **T3** = 380-3 **T5** = 440-3 **T4** = 480-3	Write/type optional equipment code in the gray box below in alphabetical order. For multiple options separate codes with a dash (–)

NOTE: 8 & 10kW single element available as lower element only.

ME		–		–			–	

Example: ME80–4.5–4.5SLS-V36

Seafare ME marine water heater with a storage capacity of 80 gallons with 4.5 kW upper and lower heating elements. Tank is cement lined and operates at 240 V, single phase, 60 Hz power, with optional ABS Tier 5 Certification.

Optional Equipment

Note: *Optional equipment must be called out using the codes below.*

Controller

C1	Immersion Thermostat (100°F - 190°F)
C2	Low Range Immersion Thermostat (30°F - 110°F)
C3	Immersion Adjustable Safety Hi-Limit Cutout with Manual Reset (100°F - 240°F)
C30	Heating Elements Wired for Simultaneous Operation
C31	Leak Detection - Includes Sensor Pad and Dry Contact for BMS Notification
C35	BACnet Communication Module with T1000 Digital Controller

Electrical

E5	Three Phase Open Delta Wiring (Must Be Simultaneous Operation)

General

G1	Combination Temperature & Pressure Gauge: 3.5" Dial, 70°F - 250°F, 0 - 200 PSI, Tank Mounted

Vessel

V5	Optional 200 PSI Working Pressure. If Other than 200, Use Code -V5-XX and Specify Pressure
V4	NSF5 Approved Legs
V10	1-1/2" Male NPT Inlet and Outlet Water Connections
V15	Additional 3/4" FNPT Tappings
V16	Additional 1-1/2" FNPT Tappings
V36	ABS Tier 5 Certification

Please note: Optional equipment may impact overall dimensions and weight. Please request submittal drawing from factory.

Available Accessories

10-year Warranty: 10-year non pro-rated tank warranty, specify part number "VESSEL WARRANTY"

Accessories Name **Part #**

H1070-D-20260129