HUBBELL
a **nudyne** company

OMNI SERIES

PBX



Highly Efficient Heat Pump Water Heater

A fully integrated, economical, energy efficient heat pump water heater. Available in 50, 65, 80, 119 gallon capacities.

Energy Star 5.0 Certification available

Transfers heat from surrounding air to heat the water in the tank

Insulated with 3" thick CFC free polyurethane foam insulation to minimize stand-by heat loss

HydraStone® tank lining ensures long tank life

- User friendly electronic controller simplifies operation, maintenance, and troubleshooting
- Designed for simple installation and service by a professional plumber
- With no anode rod, maintenance is minimum
- Rebates available – check with AHRI/Energy Star websites
- Quiet application (54 dBA)
- Ducting capabilities available
- Four run modes
- Freeze protection

Applications

Residential, restaurants, schools, office buildings, and much more.

Energy Star rated water heating solution

The Hubbell Omni PBX Heat Pump Water Heater combines the latest in heat pump technology with the proven longevity of a HydraStone lined tank. Three inches of high quality, CFC-free foam insulation, adds to the Omni PBX efficiency providing the lowest standby heat-loss rating in the industry. A streamlined user interface on the controller ensures ease of use and is highly versatile. Suitable for even the coldest climates, the Omni PBX offers a low-maintenance, affordable way to take advantage of green technologies.

Over 100 years of water heating expertise

Hubbell water heaters are the right choice for your commercial and industrial applications. We have water heating solutions for all energy sources with storage capacities from 1–10,000 gallons — all designed, engineered, and manufactured for reliability and longevity coupled with unparalleled support and service.

NOTE: Manufactured in an ISO 9001:2015 facility. ASME option available upon request.
BABA & BAA compliance is available upon request.

hubbellheaters.com **sales@hubbellheaters.com** **203.378.2650**

Heater Specifications

Tank	HydraStone® Lined Steel
Storage	50, 65, 80, 119 Gallons
Orientation	Vertical
Pressure Rating:	150 psi WP, 300 psi TP
Inlet Size:	3/4" Female NPT (1-1/2" standard on 119 gallon)
Outlet Size:	3/4" Male NPT (1-1/2" standard on 119 gallon)
Drain Size:	3/4" GHT
Condensate Size	3/8" Tube
Relief Valve Size	3/4" Female NPT
Relief Valve Type	T&P, 210°F, 150 psi
Insulation:	3" Polyurethane Foam
Jacket:	High Impact Composite
Voltage:	208-600 Volt
Phase:	Single and Three Phase
Frequency:	60 Hz
Elements:	Single Phase: Copper sheathed Three Phase: Incoloy sheathed
Hi-Limit	190°F Manual Reset
Thermostat Range:	50-160°F
Error Indication:	Visual and Audible
Child Lock Capable:	Yes
COP @ 70°F	3.55
Refrigerant:	R134A
Ozone Depleting Potential:	0
Global Warming Potential:	1430
Over Pressure Safety:	Manual Reset
Field Chargeable:	No
Air Flow (High Fan):	450 CFM
Air Flow (Low Fan):	250 CFM
Temperature Range:	35-110°F

NOTE: All single-phase PBX units will be equipped with upper and lower immersion elements, non-simultaneous only.

Standard Warranty: 1- year electrical components, 6-year heat pump, and 5-year vessel warranty.

Optional Warranty: 10-year vessel warranty (see page 10).

Installation Requirements

- The installed location must be at least a 10' x 10'x 7' room (700 cubic feet of air space)*. If smaller, there must be a louver installed to provide sufficient airflow.
- The installed room location must not be cooler than 35°F.
- Installed locations with warmer ambient air temperature (e.g., furnace room) provide abundant “free” heat and are advantageous.
- The heat pump dehumidifies the air and as a result, produces condensate which must be piped to a drain, outdoors, or an appropriate condensate pump.
- The washable air filter requires periodic cleaning. Frequency depends upon environmental conditions.

* Additional clearance required for 119 gallon

Optional Ducting Kit

- The ducting kit is designed to work with 10-inch diameter ducting.
- To ensure maximum performance, keep the duct as short and as straight as possible. Additionally try to make all necessary bends as wide of an angle as possible.

Example of possible ducting orientation

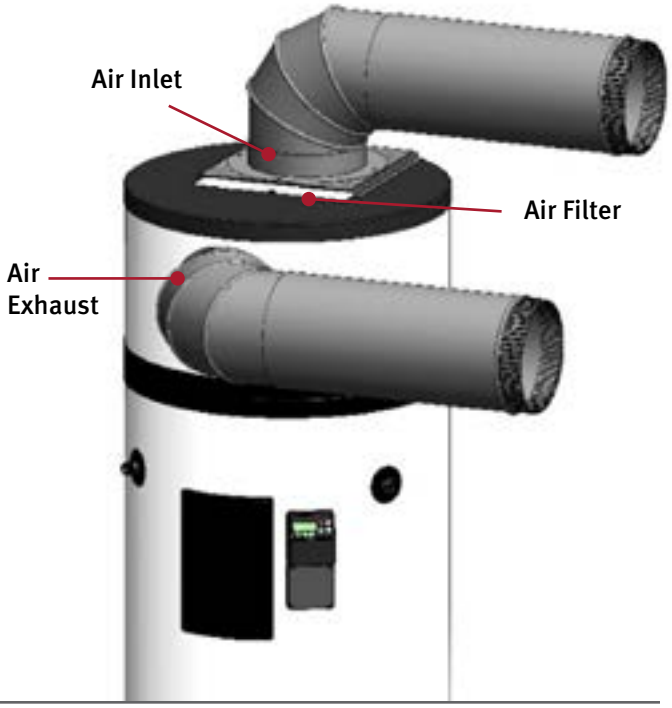

How Hubbell Omni PBX Works

The Omni PBX is significantly more energy efficient than an electric water heater because the heat pump utilizes considerably less electricity. A heat pump works like a refrigerator in reverse. A refrigerator moves heat from inside the refrigerator and transfers it to the surrounding room; a heat pump water heater captures heat from the ambient air and transfers it to the tank, heating the water.

The Hubbell Omni PBX can capture heat from air as cool as 35° F. The process of removing heat from the air and transferring it to the water results in the exhaust of cooler, dryer air. This added benefit of dehumidifying the surrounding air can provide as much as 0.4 gallons per hour of "free" dehumidification. When ducted properly, the cool air can help support the building cooling system.

If the unit cannot provide enough heating capacity to meet demand, the back-up resistive heating elements will activate to ensure the unit provides sufficient hot water.

The Omni PBX Step by Step Operation

1. The built in fan draws air from the room into the water heater heat pump compartment, across an evaporator coil, and exhausts cooler and slightly dryer (dehumidified) air.
2. The evaporator coil captures heat energy in the air and transfers that energy to a specially formulated, CFC free refrigerant contained within the evaporator.
3. The refrigerant changes from a liquid/gas mixture to 100% vapor as it gets warmer.
4. The refrigerant, now entirely vapor, exits the evaporator and passes into a compressor.
5. The vapor is compressed, causing it to become a superheated hot gas and then flows to the heat exchanger.
6. The heat exchanger transfers heat energy from the superheated hot gas to the cold water from the tank.
7. The pump circulates cold water from the tank through the heat exchanger in the upper unit, resulting in a continuous transfer of heat energy from the superheated gas to the water.
8. Hot water exits the heat exchanger and is stored in the tank.
9. The superheated gas condenses back to a liquid.
10. The liquid refrigerant expands when passing through the expansion valve, becoming a vapor/liquid mixture, and then waits to repeat the process.

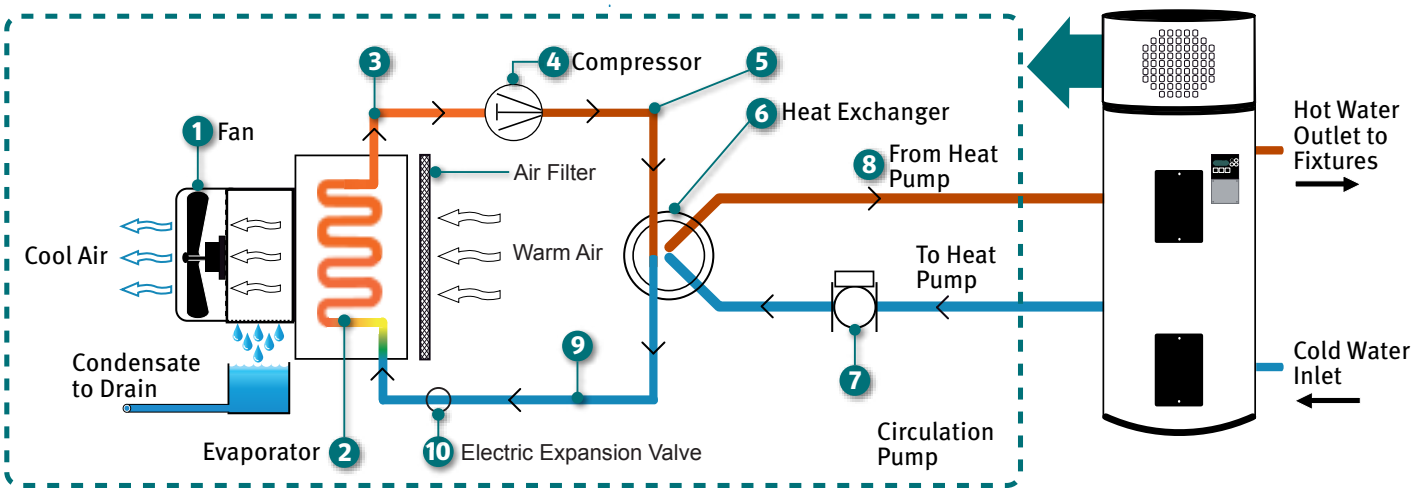

Selectable Operating Modes

Economy Mode	In the Economy Mode the heat pump provides all of the heating capacity. This is typically the mode with the lowest operating cost.
Hybrid Mode	This mode optimizes both efficiency and user experience. It is the default setting. In the Hybrid Mode the heat pump provides the vast majority of the heating capacity and automatically switches to the electric resistance heater mode only when necessary to meet high demand or to optimize efficiency.
Electric Mode	The Electric Mode tells the heater to operate using only the electric resistance elements and to operate like a traditional electric water heater. The heat pump is not used in this mode.
Super Mode	This mode allows both the heat pump and the electric resistance elements to operate simultaneously. Due to this simultaneous operation, Super Mode provides the fastest recovery option possible.

Temporary Modes

Vacation Mode	This mode prevents the heater from heating (regardless of what mode it is in) as a way to improve efficiency during long periods of non usage (i.e. vacation). In Vacation Mode the only time the heater will operate is if the unit is in danger of freezing. The user sets the number of days to be in Vacation Mode (adjustable from 2 to 99 days or Off), and the unit resumes its previous mode of operation at the end of this period.
Max Heat	By using the Max Heat button, you will maximize the heating capacity by temporarily putting the heater into Super Mode.
Fan Off	By using the Fan Off button, you will temporarily lower the fan speed which reduces the airflow and minimizes operating noise. Pressing the button twice temporarily disables the fan for a programmable amount of time.

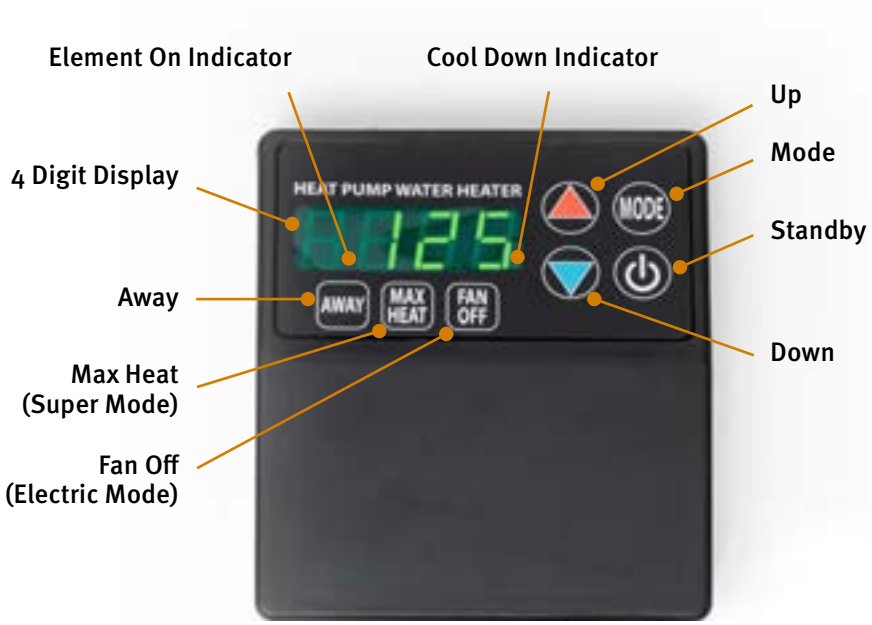

Dimensions Sample dimensions are for a PBX120-3.8-3.8SLS

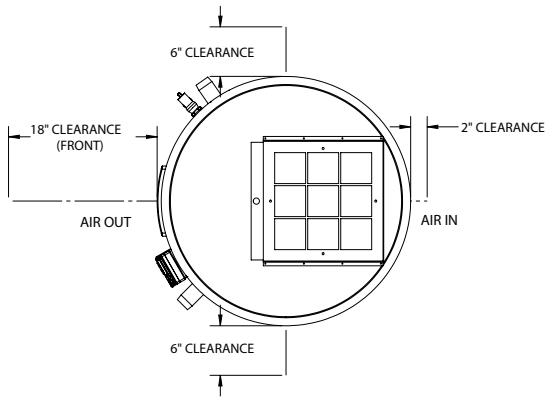

TOP VIEW

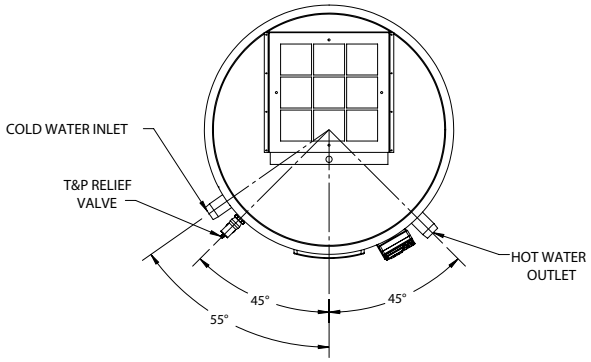

TOP VIEW

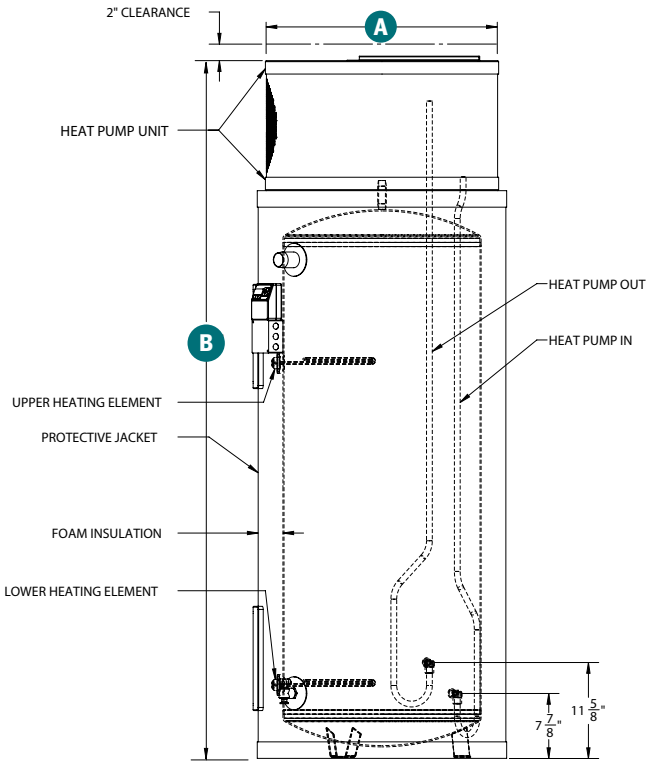

SIDE VIEW

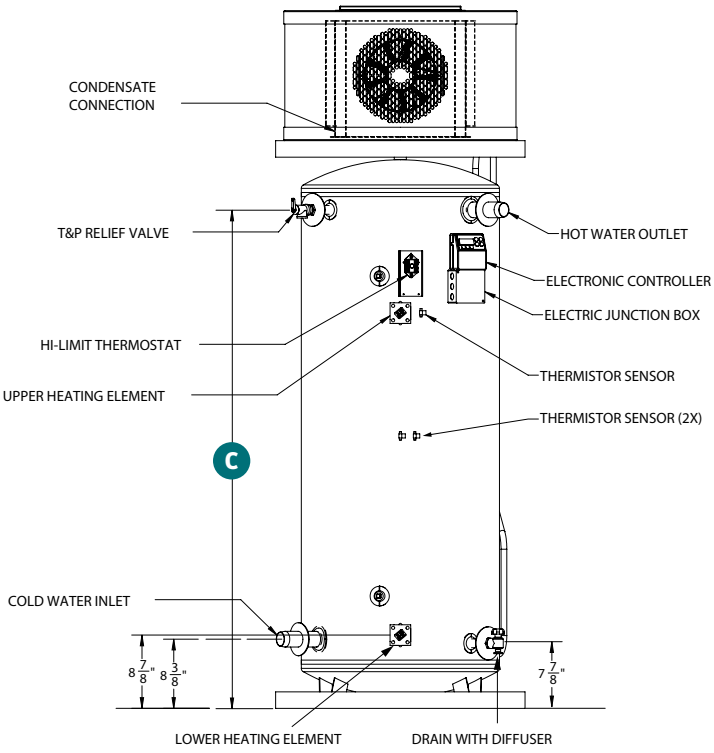

FRONT VIEW (SHOWN WITH COVER REMOVED

Omni PBX Dimensional Data

All information is subject to change without notice. Consult factory for submittal drawings.

Storage Capacity (Gallons)	Base Model Number	Dimensions (inches)			Shipping Weight (lbs.)
		Overall Diameter A	Overall Height B	Floor to T&P and HW Outlet C	
50	PBX50	28	58.25	33.875	325
65	PBX65	28	63.75	39.375	365
80	PBX80	28	74	49.875	440
119	PBX120	30	84.5	60.375	525

kW and Amperage Selection Charts

50 Gallon kW and Amperage *(Amperage shown in chart below indicates available models)*

kW	Recovery (GPH)	1 Phase Voltages				3 Phase Voltages				
		208	240	277	480	208	240	380	480	600
1	4	7	7	6						
1.5	6	10	9	8	5					
2	8	12	11	10	7	8				
2.5	10	14	13	11	8					
3	12	17	15		9	11				
3.8	14	21	18	16	10					
4	16	22	19	17	11	14	12		7	
4.5	18	24	21	19	12					
5	21	26	23	20	13	16	14		8	
6	25	31	27	24	15	19	17		10	
7	29									
8	33	41	36	31		25	22		12	
9	37									
10	41		44	38			27		14	
12.5	51		54				33			14
13	53							22	18	15
14	57				32					
15	61	74				44				
16	66		69				41			
17	70			64				28	23	19
20	82		86				51			

Note:

- For alternative voltages, including 220, 415, 440, 460 volt, please consult factory for available kW selection.
- Amperage ratings reflect FLA in Super Mode



All information is subject to change without notice. Consult factory for submittal drawings.

65 Gallon kW and Amperage *(Amperage shown in chart below indicates available models)*

kW	Recovery (GPH)	1 Phase Voltages				3 Phase Voltages				
		208	240	277	480	208	240	380	480	600
1	4	7	7	6						
1.5	6	10	9	8	5					
2	8	12	11	10	7	8				
2.5	10	14	13	11	8					
3	12	17	15		9	11				
3.8	14	21	18	16	10					
4	16	22	19	17	11	14	12		7	
4.5	18	24	21	19	12					
5	21	26	23	20	13	16	14		8	
6	25	31	27	24	15	19	17		10	
7	29									
8	33	41	36	31		25	22		12	
9	37									
10	41		44	38			27		14	
12.5	51		54		28		33			14
13	53							22	18	15
14	57				32	41	36			
15	61	74			34	44				
16	66		69		36		41	27	22	
17	70			64				28	23	19
18	74	89				53				
19	78				42		48	31	25	

Note:

- For alternative voltages, including 220, 415, 440, 460 volt, please consult factory for available kW selection.
- Amperage ratings reflect FLA in Super Mode



All information is subject to change without notice. Consult factory for submittal drawings.

80 and 119 Gallon kW and Amperage

(Amperage shown in chart below indicates available models)

kW	Recovery (GPH)	1 Phase Voltages				3 Phase Voltages				
		208	240	277	480	208	240	380	480	600
1	4	7	7	6						
1.5	6	10	9	8	5					
2	8	12	11	10	7	8				
2.5	10	14	13	11	8					
3	12	17	15		9	11				
3.8	14	21	18	16	10					
4	16	22	19	17	11	14	12		7	
4.5	18	24	21	19	12					
5	21	26	23	20	13	16	14		8	
6	25	31	27	24	15	19	17		10	
7	29									
8	33	41	36	31		25	22		12	
9	37									
10	41		44	38			27		14	
12.5	51		54		28		33	21		14
13	53			49	29			22	18	15
14	57	70			32	41	36			
15	61	74	65		34	44	39			
16	66		69	60	36		41	27	22	
17	70			64				28	23	19
18	74	89				53				
19	78		82		42		48	31	25	21
20	82		86	75	44		51	33	27	
21	86			78		61			28	23
23	94	113				67		38		
24	98		102		52		60			
25	102			93	54			41	33	27
26	106									28
27	111	132				78			35	
29	119				63	83	73			
30	123		127				75	48		
31	127				67					32
32	131			118		92		51	41	
36	147						90	57		
38	156				82		94	60	48	
39	160									40
41	168								52	
43	176					123	107			
46	188				98					
48	197							76	60	
57	233						140		71	
58	237							91		

AVAILABLE IN 119-GALLON MODEL ONLY

Notes:

- Units 41 kW and over are supplied with 1-½" Male NPT inlet/outlet connections and immersion hi-limit.
- For alternative voltages, including 220, 415, 440, 460 volt, please consult factory for available kW selection.
- Amperage ratings reflect FLA in Super Mode

All information is subject to change without notice. Consult factory for submittal drawings.

Hubbell Omni PBX Energy Facts

The Hubbell Omni PBX can be built to meet or exceed American National Standards Institute (ANSI) requirements and has been tested according to D.O.E. test procedures. With specific specifications it can meet or exceed the requirements of the National Appliance Energy Conservation Act (NAECA), efficiency ASHRAE standard 90, ICC Code and all state energy efficiency performance criteria for energy consuming appliances.

Annual Energy Consumption at 67.5°F Ambient Air

Model	Annual Energy Consumption kWh
PBX50	938
50 gallon electric	3500
PBX65	974
65 gallon electric	4445
PBX80	1424
80 gallon electric	5390
PBX120	1376
120 gallon electric	5500

Note: Ratings are not AHRI Certified



Heat Pump Only Recovery Rating (GPH) at 67.5°F Ambient Air (Economy Mode)

Recovery Capacity (Gallons per Hour for Omni PBX Heat Pump											
Heating Power		Water Temperature Rise (Degrees °F)									
Wattage	BTU/Hr	100	90	80	70	60	50	40	30	20	10
1,400	4,777	5.73	6.36	7.16	8.18	9.55	11.46	14.32	19.09	28.64	57.28

Heat Pump Ratings

	AHRI CERTIFIED					RATINGS NOT AHRI CERTIFIED			
Model	Nominal Capacity	Rated Storage Volume	First Hour	UEF	Usage Bin	Cold Climate Efficiency(CCE)	NEEA	Sound Level	CTA
	GALLONS	GALLONS	GPH					dBA	
PBX50	50	47	58	3.46	Medium	N/A	N/A	54	No
PBX65	65	57	70	3.34	Medium	N/A	N/A	54	No
PBX80	80	74	86	3.48	High	N/A	N/A	54	No
PBX120	119	109	105	3.38	High	N/A	N/A	54	No

All information is subject to change without notice. Consult factory for submittal drawings.

Omni PBX Model Number Designation

MODEL	BASE MODEL NUMBER	STYLE	UPPER ELEMENT kW	LOWER ELEMENT kW	TANK	VOLTAGE / PHASE*	OPTIONAL EQUIPMENT
PBX	50 65 80 120	*Leave blank for standard* **A** = ASME	0 – 19 kW (For all 3-phase applications, the upper element will always be 0)	1 – 58 kW	**SL** = HydraStone® cement lined tank **CN** = Solid copper-nickel tank **SS** = Stainless steel 316L *CN and SS tanks come standard with galvanneal jacket and fiberglass insulation.*	**RS** = 208/1 **S** = 240/1 **T4S** = 480/1 **R** = 208/3* **T** = 240/3* **T4** = 480/3*	Write/type optional equipment code in the gray box below in alphabetical order. For multiple options separate codes with a dash (–)

PBX			–		–				–	

Example: PBX80A-0-5SLT4-V10

Hubbell Omni PBX heat pump water heater with 80 gallon storage tank, ASME stamped and registered, 5 kW lower element, HydraStone® cement lined tank, 480 V, 3-phase heating elements, with optional 1-½" male NPT inlet and outlet water connections.

Optional Equipment

Optional equipment must be called out in the written specifications, use the codes below.

Electrical

Note: Alternate voltages (1 or 3 phase), alternate wattages available. Please consult factory

Controls

C34 BACnet Communication Module with ETC Controller

Heat Exchanger

H8 Additional single wall indirect coil installed in tank

H9 Additional double wall indirect coil installed in tank

Vessel

V1 NSF5 Approved Legs

V10 1-½" Male NPT inlet and outlet water connections (standard on 119 gallon)

Please note: Optional equipment may impact overall dimensions and weight. Please request submittal drawing from factory.

Available Accessories

Condensate Pump: A condensate pump to remove and lift condensate to drain, specify part number "CONDENSATE PUMP 115V"

Ducting Kit: When the heat pump is ducted, air will move efficiently throughout a ducted building. "900-00010-00"

10-year Warranty*: 10-year non pro-rated tank warranty, specify part number "VESSEL WARRANTY"

Accessories Name		**Part #**	
Accessories Name		**Part #**	
Accessories Name		**Part #**	

***Note:** 10- year warranty is standard for residential. 5-year is standard for commercial (1- year electrical components, 6-year heat pump, and 5-year vessel warranty)

H1028-K-20260914