HUBBELL
a **nudyne** company

ENDURANCE SERIES

SE



Commercial Electric Water Heater

19–119 gallon capacity, up to 58 kW in all three phase voltages, over 12 kW in all single phase voltages

A heavy duty commercial electric water heater built for high volume demand

HydraStone® cement lining provides longer tank life

High impact composite jacket cannot rust or corrode

Copper-silicon alloy tappings cannot rust or corrode

- Polyurethane foam insulation reduces heat loss
- Built-in heat trap lowers operating costs
- Built to meet your exact needs
- Numerous options available for specialized applications
- Full five (5) year Non Pro-rated tank warranty is standard
- Full ten (10) year Non Pro-rated tank warranty can be specified for extended protection

Applications

Office buildings, schools, hospitals, industrial facilities, hotels, and much more.

A long lasting, trouble-free water heater

The Hubbell Endurance SE water heater incorporates a number of features not found in other conventional heaters, that make it better suited to resist the highly corrosive effects of hot water. The heart of a Hubbell water heater is a superior storage vessel which utilizes a specially formulated HydraStone cement lining, solid copper-silicon threaded tank openings and a built-in heat trap device, all of which ensure a longer lasting and energy efficient water heater.

Over 100 years of water heating expertise

Hubbell water heaters are the right choice for your commercial and industrial applications. We have water heating solutions for most energy sources with storage capacities from 1–10,000 gallons — all designed, engineered, and manufactured for reliability and longevity coupled with unparalleled support and service.

NOTE: Manufactured in an ISO 9001:2015 facility. ASME option available upon request. BABA & BAA compliance is available upon request.

hubbellheaters.com **sales@hubbellheaters.com** **203.378.2650**

Heater Specifications

Tank	HydraStone® Cement Lined Steel
Capacities	19–119 gallons
Orientation	Vertical, horizontal option available
Voltages	208–600 Volt
Phases	1Φ or 3Φ
Inlet Size	Below 40 kW: ¾" Female NPT 40 kW and over: 1-½" Male NPT
Outlet Size	Below 40 kW: ¾" Male NPT 40 kW and over: 1-½" Male NPT
Drain Size	¾" GHT
Relief Valve Size	¾" Female NPT
Relief Valve Type	T&P, 210°F, 150 psi
Thermostat Range	Surface: 110–170°F Immersion: 100–190°F
Hi-Limit	190°F Manual Reset
Design WP	150 psi
Design TP	300 psi
Elements	Incoloy Sheathed
Insulation	2" Polyurethane Foam on < 30 Gal 3" Polyurethane Foam on >/= 30 Gal
Tank Warranty	
Standard	5 year Non Pro-Rated
Optional	10 year Non Pro-Rated
Electrical Warranty	1 Year
Jacket	High Impact Colorized Composite
Finish	White and Black

For horizontal ceiling hung or floor mount in 20 or 30 gallon capacity see Endurance EH/SEH brochure.

Standard Equipment

- ½" thick HydraStone® cement lining (NSF 61 Compliant)
- Non-ferrous solid copper-silicon threaded openings for maximum corrosion resistance
- Incoloy sheathed immersion heating elements
- Built-in heat trap to improve operating efficiency (¾" inlet/outlet models only)
- Surface thermostat 110–170°F range
- Immersion thermostat (100–190°F) furnished as standard when required due to high recovery versus storage ratio
  - On 80–119 gallon heaters over 15 kW
- Hi-limit cut out safety feature with manual reset button
  - Surface safety hi-limit cut out with manual reset button (190°F)
  - Immersion safety hi-limit cut out with manual reset button (Standard on heaters 45 KW and above)
- 1-½" Male NPT inlet/outlet connections (standard on heaters 40 kW and above)
- ASME/CSA rated temperature and pressure relief valve set at 150 psi, 210°F
- Polyurethane foam insulation helps against heat loss
- High impact non-corroding colorized composite protective jacket
- Cold water inlet diffuser with drain valve



All information is subject to change without notice. Consult factory for submittal drawings.

kW and Amperage Selection Charts

20 Gallon kW and Amperage *(Amperage shown in chart below indicates available models)*

kW	Recovery (GPH)	1 Phase Voltages				3 Phase Voltages				
		208	240	277	480	208	240	380	480	600
13	53								16	13

30, 40 and 55 Gallon kW and Amperage *(Amperage shown in chart below indicates available models)*

kW	Recovery (GPH)	1 Phase Voltages				3 Phase Voltages				
		208	240	277	480	208	240	380	480	600
12.5	51		52				30			12
13	53			47				20	16	13
14	57			51	29				17	
15	61	72				42				
16	66		67				39			
17	70			61				26	20	16
20	82		83				48			
21	86			76					25	20
26	106									25
27	111			97					33	

Under Counter 30U, 40U and 50U Gallon kW and Amperage *(Amperage shown in chart below indicates available models)*

kW	Recovery (GPH)	1 Phase Voltages				3 Phase Voltages				
		208	240	277	480	208	240	380	480	600
12.5	51				26					12
13	53								16	13
14	57					39	34			
15	61				31					
16	66							24	19	
19	78						46	29	23	

All information is subject to change without notice. Consult factory for submittal drawings.

65 Gallon kW and Amperage *(Amperage shown in chart below indicates available models)*

kW	Recovery (GPH)	1 Phase Voltages				3 Phase Voltages				
		208	240	277	480	208	240	380	480	600
12.5	51		52		26		30			12
13	53				27			20	16	13
14	57				29	39	34		17	
15	61	72			31	42				
16	66		67		33		39	24	19	
17	70			61		48		26	20	16
18	74	87								
19	78				40		46	29	23	
20	82		83				48	30		
21	86			76		58			25	20
23	94						64			
24	98						58	37		
25	102				52					
26	106									25
27	111								33	
29	119					81	70			
31	127				65					
32	131							49	39	
38	156						92	58	46	



All information is subject to change without notice. Consult factory for submittal drawings.

80, 100 and 120 Gallon kW and Amperage

(Amperage shown in chart below indicates available models)

kW	Recovery (GPH)	1 Phase Voltages				3 Phase Voltages				
		208	240	277	480	208	240	380	480	600
12.5	51		52		26		30	19		12
13	53			47	27			20	16	13
14	57	67			29	39	34		17	
15	61	72	63		31	42	36			
16	66		67	58	33		39	24	19	
17	70			61		48		26	20	16
18	74	87			38	50				
19	78		79		40		46	29	23	18
20	82		83	72	42		48	30	24	
21	86			76		58			25	20
23	94	111				64	56			
24	98		100		50		58	37	29	
25	102			90	52			38	30	24
26	106									25
27	111	130				75			33	
29	119				60	81	70			
30	123		125				72	46		
31	127				65					30
32	131			116		89		49	39	
36	147						87	55		
38	156				79		92	58	46	
39	160									38
41	168								49	
43	176					119	104			
46	188				96					
48	197							73	58	
57	233						137		69	
58	237							88		

Notes:

1. Units 40 kW and over are supplied with 1-½" Male NPT inlet/outlet connections and immersion hi-limit.
2. For alternative voltages, including 220, 415, 440, 460 volt, please consult factory for available kW selection.
3. For ASME units, please consult factory as some kW values may differ.

All information is subject to change without notice. Consult factory for submittal drawings.

Dimensions

Note: On models with 1-½" inlet and outlet connections, the cold water inlet is located 45° left of front center line, the drain valve is located 45° right of front center line and the relief valve is located 55° right of front center line.

Note: Hubbell utilizes both flanged elements or grouped screw plug elements depending on total applied kW and specific application.

Flanged Elements

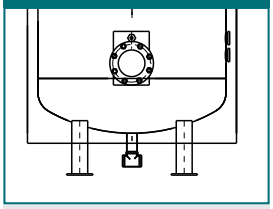

Grouped Screw Plug Elements

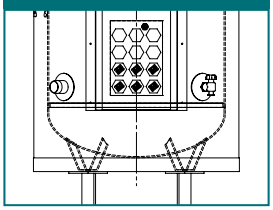

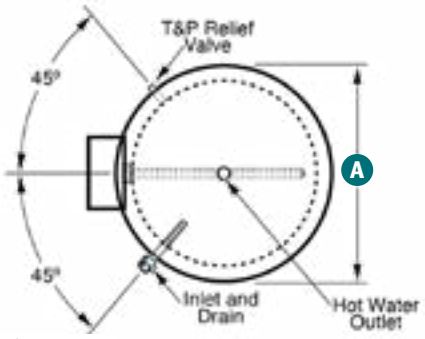

TOP VIEW

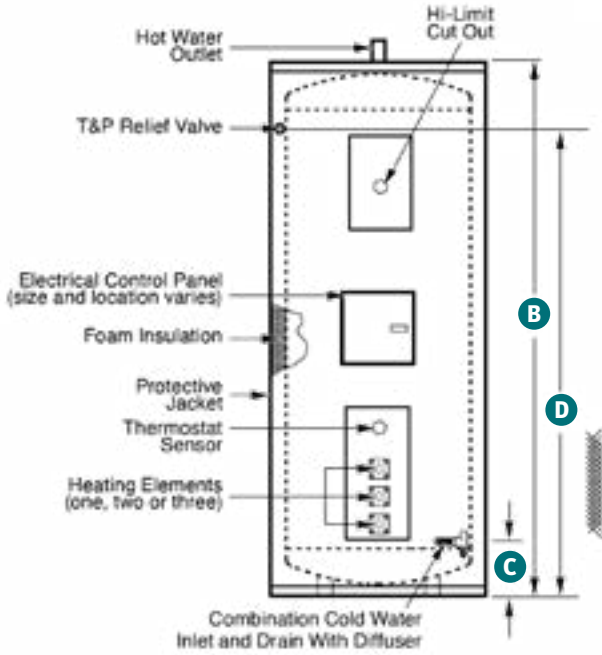

FRONT VIEW

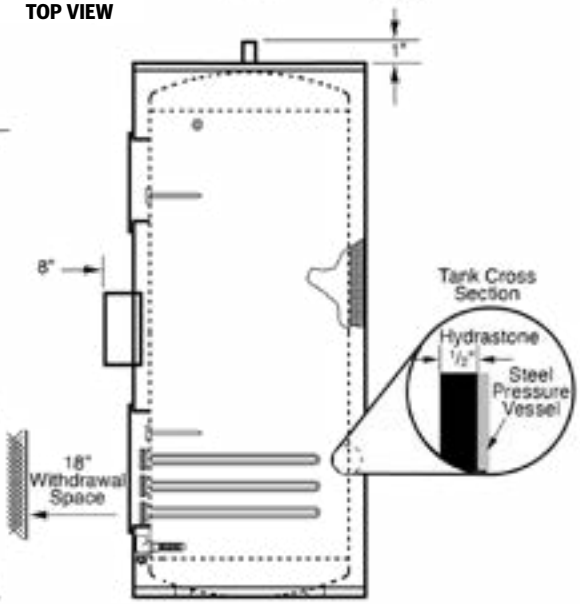

SIDE VIEW

Endurance SE Dimensional Data

Base Model Number	Storage Capacity (Gal)	Maximum kW Input	Dimensions (Inches)				Shipping Weight (lbs.)
			Diameter "A"	Height "B"	Floor to Inlet "C"	Floor to T&P "D"	
SE20	19	15	20	32.75	7.5	26.75	175
SE30	30	30	22.75	41.625	7.5	34.25	210
SE40	40	30	22.75	57.25	7.5	50	265
SE55	55	45	25	58.25	7.875	50.875	375
SE65	65	57	28	47.25	7.875	38.875	335
SE80	80	57	28	58.25	7.875	49.875	410
SE100	100	57	28	68.5	7.875	60.5	425
SE120	119	57	30	68.75	7.875	60.375	495
SE30U	30	30	25	35.75	7	24	215
SE40U	40	45	28	31.75	7.875	25.375	295
SE50U	50	45	30	37.25	7.875	27.625	300

Under counter options

Note: Under counter models SE30U, SE40U, and SE50U have hot water outlet located on the side.

All information is subject to change without notice. Consult factory for submittal drawings.

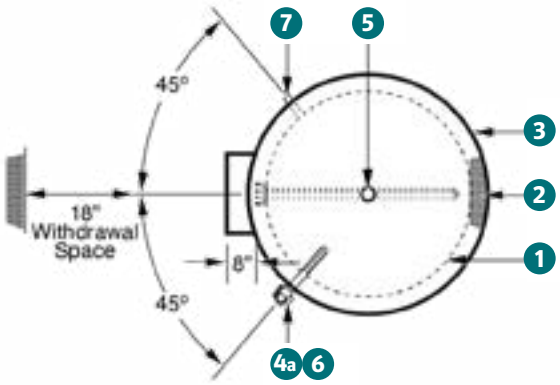

TOP VIEW – 3/4" INLET/OUTLET MODELS

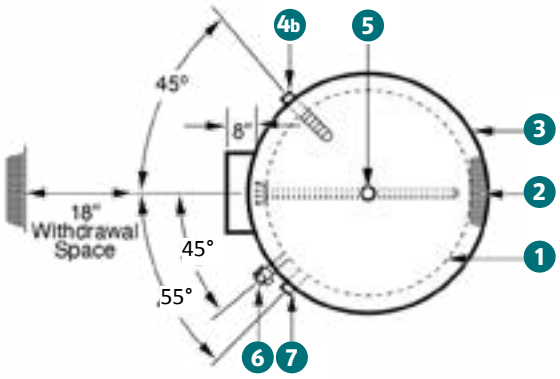

TOP VIEW – 1 1/2" INLET/OUTLET MODELS

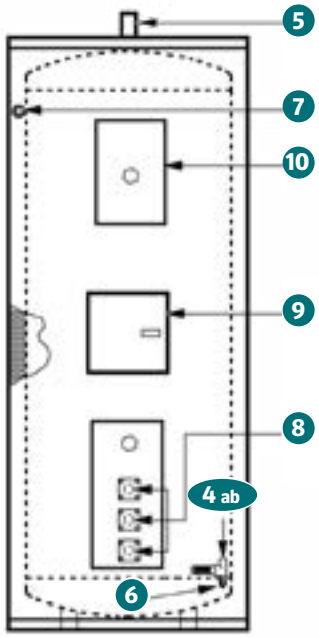

FRONT VIEW

Diagram Key

Number	Description
1	HydraStone® cement lined tank
2	Polyurethane foam insulation
3	Corrosion resistant jacket
4A	Cold water inlet ¾" models
4B	Cold water inlet 1-½" models
5	Hot water outlet
6	Drain connection ¾" GHT
7	Relief valve connection ¾"
8	Heating element(s)
9	Electrical control panel
10	Hi-limit/upper panel

Formulas to Solve For:

Recovery

GPH x _____°FΔT x 0.00244 = kW

kW x 410 ÷ GPH = _____°FΔT

kW x 410 ÷ _____°FΔT = GPH

Note: 1 kW will heat 4.1 GPH at a 100 °FΔT

Electrical

$$\frac{kW \times 1000}{Volts} \div 1.73 = Amps\ 3\ \Phi \qquad \frac{kW \times 1000}{Volts} = Amps\ 1\ \Phi$$

Notes:

1. Storage tank rated for 150 psi WP
2. ASME rated T&P relief valve shipped loose
3. Built-in heat trap supplied in hot water outlet (¾" inlet/outlet models only)
4. All electrical controls are factory wired and tested
5. Exact size and location of electrical control panel varies depending upon model

Note: Horizontal available – see EH/SEH brochure.

All information is subject to change without notice. Consult factory for submittal drawings.

Endurance SE Model Number Designation

MODEL	MODEL NUMBER	STYLE	*See charts on pages 3-5* UPPER kW	LOWER kW	TANK	VOLTAGE / PHASE	OPTIONAL EQUIPMENT
SE	20* 30 40 50** 55 65 80 100 120	*Leave blank for standard* **A** = ASME‡ **U** = Under counter† **H** = Horizontal††	Element bank 0–58 kW (typically 0) Not available in 19 Gallon capacity heaters	Element bank 12.5–58 kW	**SL** = HydraStone® cement lined **CN** = Solid 90/10 Copper Nickel **SS** = Stainless steel 316L *CN and SS tanks come standard with galvanneal jacket and fiber-glass insulation.*	**RS** = 208/1 **S** = 240/1 **W** = 277/1 **T4S** = 480/1 **Balanced 3Φ only** **R** = 208/3 **T** = 240/3 **T3** = 380/3 **T7** = 415/3 **T5** = 440/3 **T4** = 480/3 **T6** = 600/3	Write/type optional equipment code in the gray box below in alphabetical order. For multiple options separate codes with a dash (–).

Example: SE120–0–18SLT4–V15

Endurance SE, 119 gallons with 0 kW in upper element bank and 18 kW in the lower element bank. Storage tank is lined with HydraStone cement and the electrical controls operate at 480 V, three phase, 60 Hz power. Includes additional ¾" FNPT tapping.

Important notes:

* 2" foam insulation standard on 20 gallon models, 30 gallon and larger include standard 3" foam insulation

**50 gallon available only for under counter

‡ ASME models have slightly different dimensions, consult factory

† Available in 30, 40 and 50 gallon sizes only

†† For 20-55 gallon capacity, see Endurance EH/SEH brochure

Optional Equipment

Optional equipment must be called out in specifications, use the codes below.

Controller

C1	Immersion Thermostat (100°F - 190°F)
C2	Low Range Immersion Thermostat (30°F - 110°F)
C3	Immersion Adjustable Safety Hi-Limit Cutout with Manual Reset (100°F - 240°F)
C5	Low Water Cutoff
C10	Fused Power Circuits
C15	Non-Fused Disconnect Switch
C16	Fused Disconnect Switch
C20	Enable/Disable Relay (Specify Voltage)
C21	Dry Contact for Remote Alarm Capability (Specify Condition)
C25	Upgrade to a 40XL 3.4" T&P Relief Valve (A 100XL 3/4" T&P is Standard and Included in Pricing)
C31	Leak Detection - Includes Sensor Pad and Dry Contact for BMS Notification
C32	Leak Detection - Includes Sensor Pad, Dry Contact for BMS Notification, and 3/4" Solenoid Valve
C35	BACnet Communication Module with T1000 Digital Controller

Electrical

E1	Fused Low Voltage Transformer

General

G1	Combination Temperature & Pressure Gauge: 3.5" Dial, 70°F - 250°F, 0 - 200 PSI, Tank Mounted

Vessel

V1	NSF5 Approved Legs
V3	3" Polyurethane Foam Insulation
V4	2" Polyurethane Foam Insulation
V5	Optional 200 PSI Working Pressure. If Other than 200, Use Code -V5-XX and Specify Pressure
V10	1-1/2" Male NPT Inlet and Outlet Water Connections
V11	2" Inlet/Outlet Connections
V15	Additional 3/4" FNPT Tappings
V16	Additional 1-1/2" FNPT Tappings
V20	Integrally Welded Seismic Attachment Points

Please note: Optional equipment may impact overall dimensions and weight. Please request submittal drawing from factory.

Available Accessories

10-year Warranty: 10-year non pro-rated tank warranty, specify part number "VESSEL WARRANTY"

Accessories Name **Part #**

All information is subject to change without notice. Consult factory for submittal drawings.

H1030-L-20261013